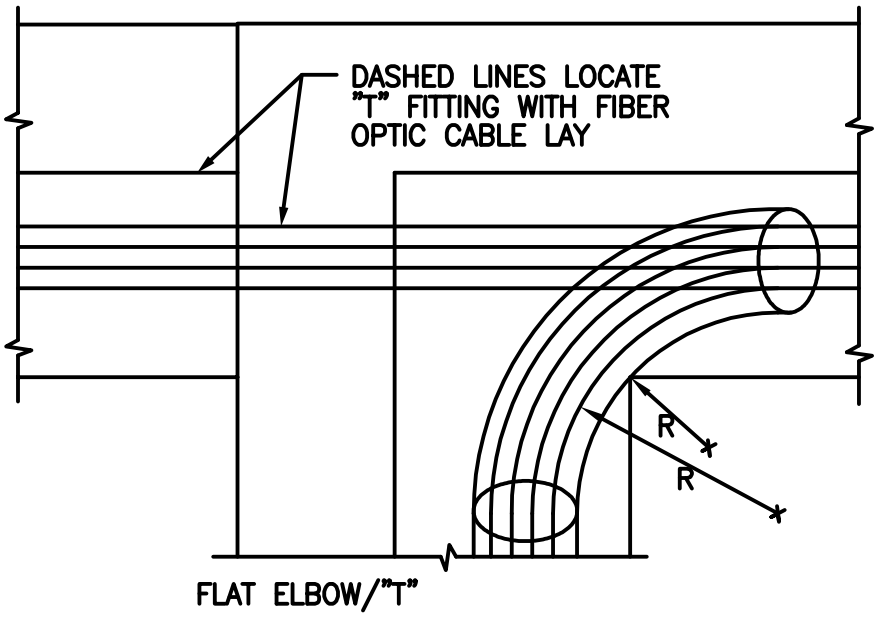

BENDING RADIUS FOR FIBER OPTIC CABLES AND
CAT 6 AS PER MANUFACTURER'S SPECIFICATIONS
AND TIA/EIA STANDARDS

NOTE:

- IF USING EXISTING NON-FIBER RATING FITTINGS USE APPROPRIATE FIBER INSERT.
- ALL NEW FITTINGS SHOULD BE FIBER RATED SURFACE MOUNTED METAL RACEWAY FIBER READY

CHICAGO PUBLIC SCHOOLS
CAPITAL IMPROVEMENT PROGRAM
INFORMATION TECHNOLOGY SERVICES

INFRASTRUCTURE STANDARDS

FLAT ELBOW/ "T"
CABLING LAY

NO.	DATE	REVISION	BY

DESIGNED CPS				SHEET NO.
DRAWN CPS				ED.853
CHECKED CPS	PROJECT NUMBER	SCALE	DATE	
APPROVED CPS		NONE	08/28/08	